- :
-
-
-
-
-
-
-
-
-

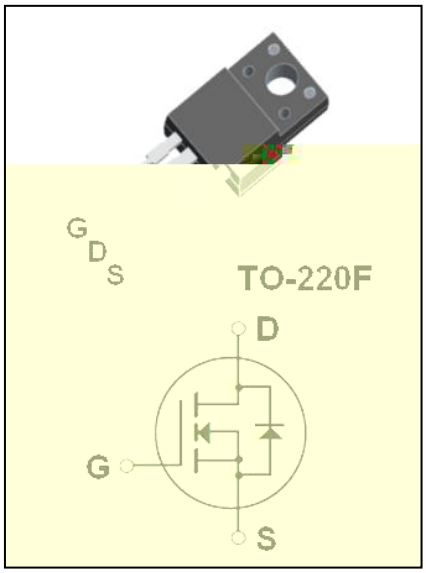
G
D
S
TO-220F
D
G
S

°

	°		
	°		
		±	
	°)		
			°
			°
			°

			°
			°

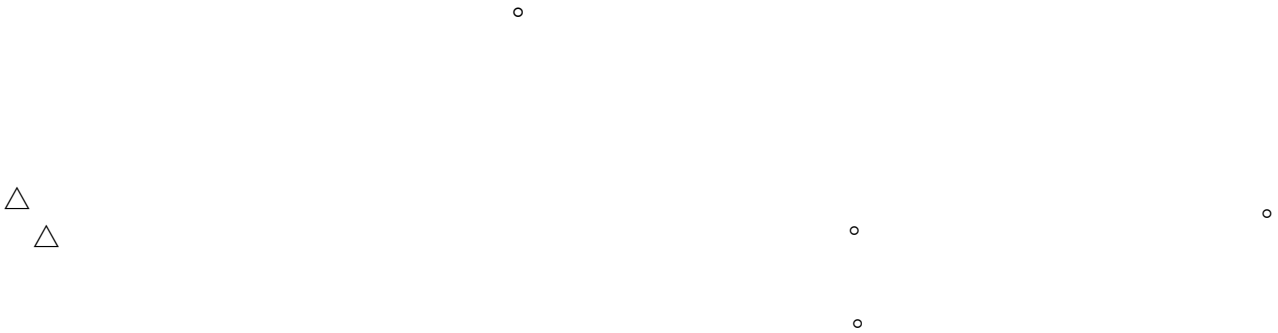

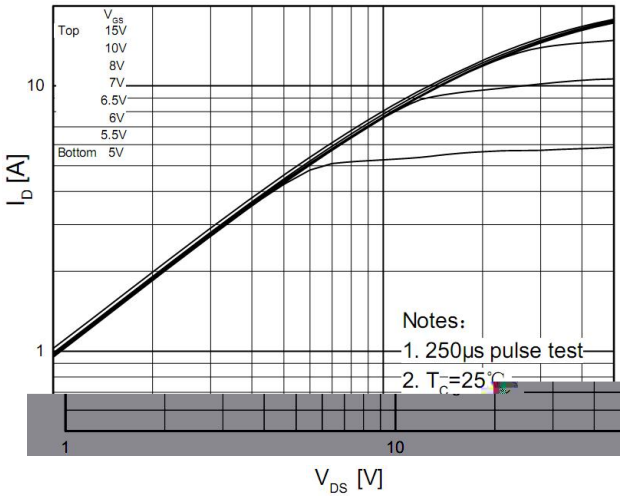
Top
V_{GS}
15V
10V
8V
7V
6.5V
6V
5.5V
Bottom 5V
Notes:
1. 250μs pulse test
2. T_C=25℃
I_D [A]
V_{DS} [V]

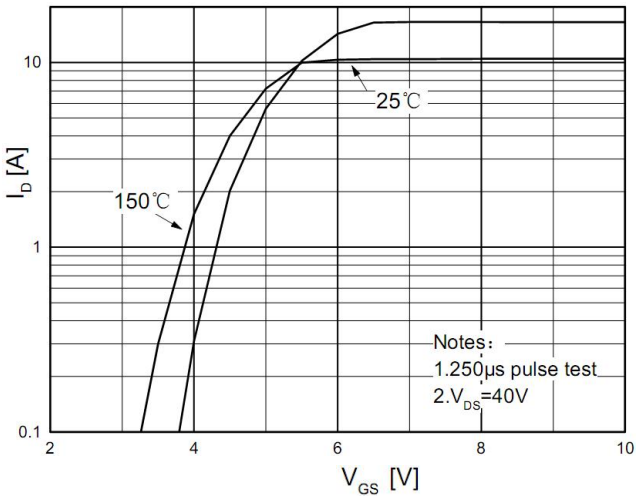
25℃
150℃
Notes:
1.250μs pulse test
2.V_{DS}=40V
I_D [A]
V_{GS} [V]

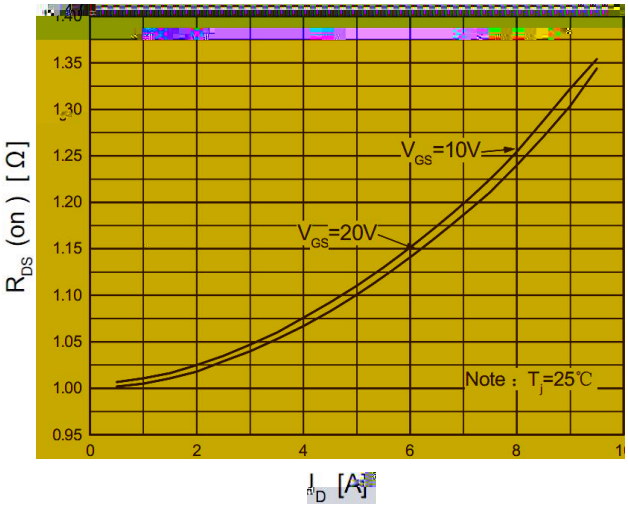
V_{GS}=10V
V_{GS}=20V
Note : T_j=25℃
R_{DS} (on) [Ω]
I_D [A]

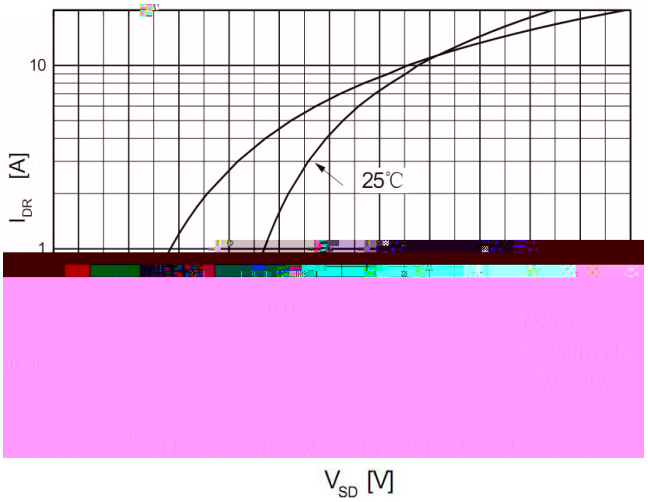
25℃
I_{DR} [A]
V_{SD} [V]

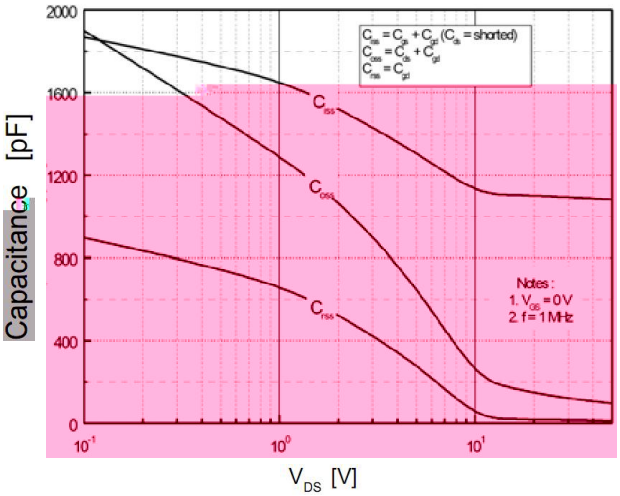
$C_{iss} = C_{gd} + C_{gs}$ (C_{ds} = shorted)
$C_{oss} = C_{ds} + C_{gd}$
$C_{rss} = C_{gd}$
C_{iss}
C_{oss}
C_{rss}
Notes:
1. V_{GS} = 0V
2. f = 1MHz
Capacitance [pF]
V_{DS} [V]

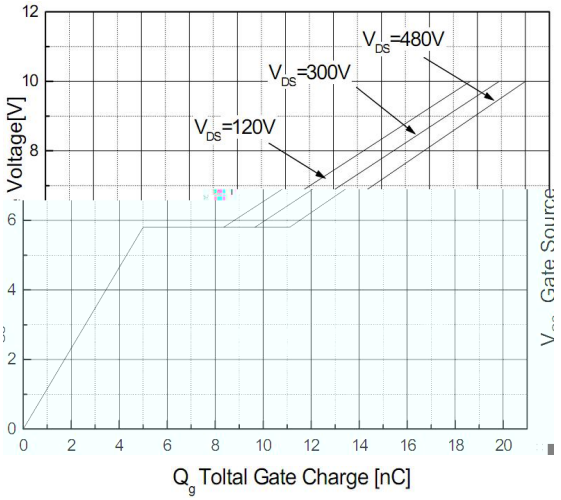
V_{DS}=480V
V_{DS}=300V
V_{DS}=120V
Voltage[V]
Q_g Toltal Gate Charge [nC]

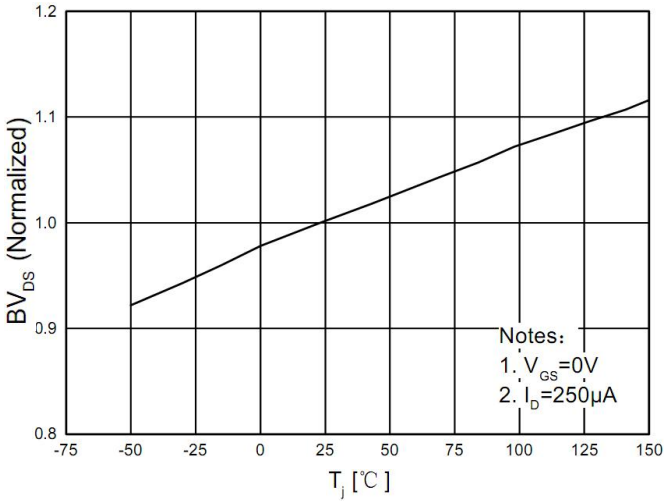
BVDS (Normalized)
Tj [℃]
Notes:
1. VGS=0V
2. ID=250μA

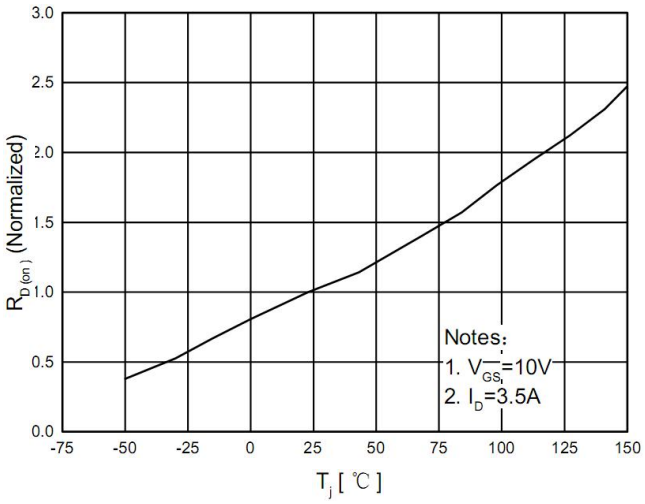
RD(on) (Normalized)
Tj [℃]
Notes:
1. VGS=10V
2. ID=3.5A

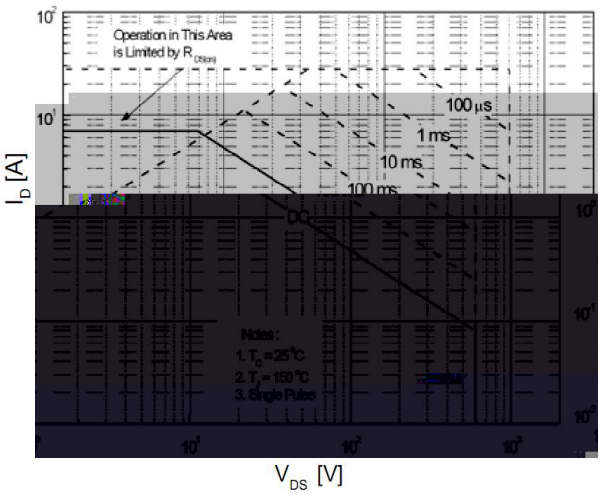
Operation in This Area
is Limited by RDS(on)
100 μs
1 ms
10 ms
100 ms
DC
ID [A]
VDS [V]

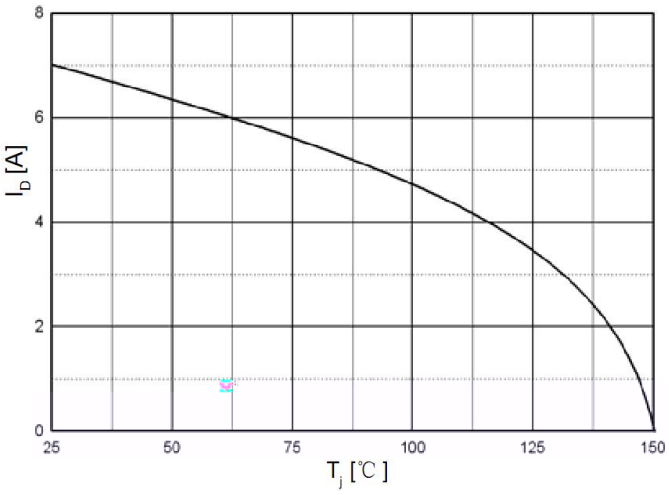
ID [A]
Tj [℃]

:

						× °	
						°	

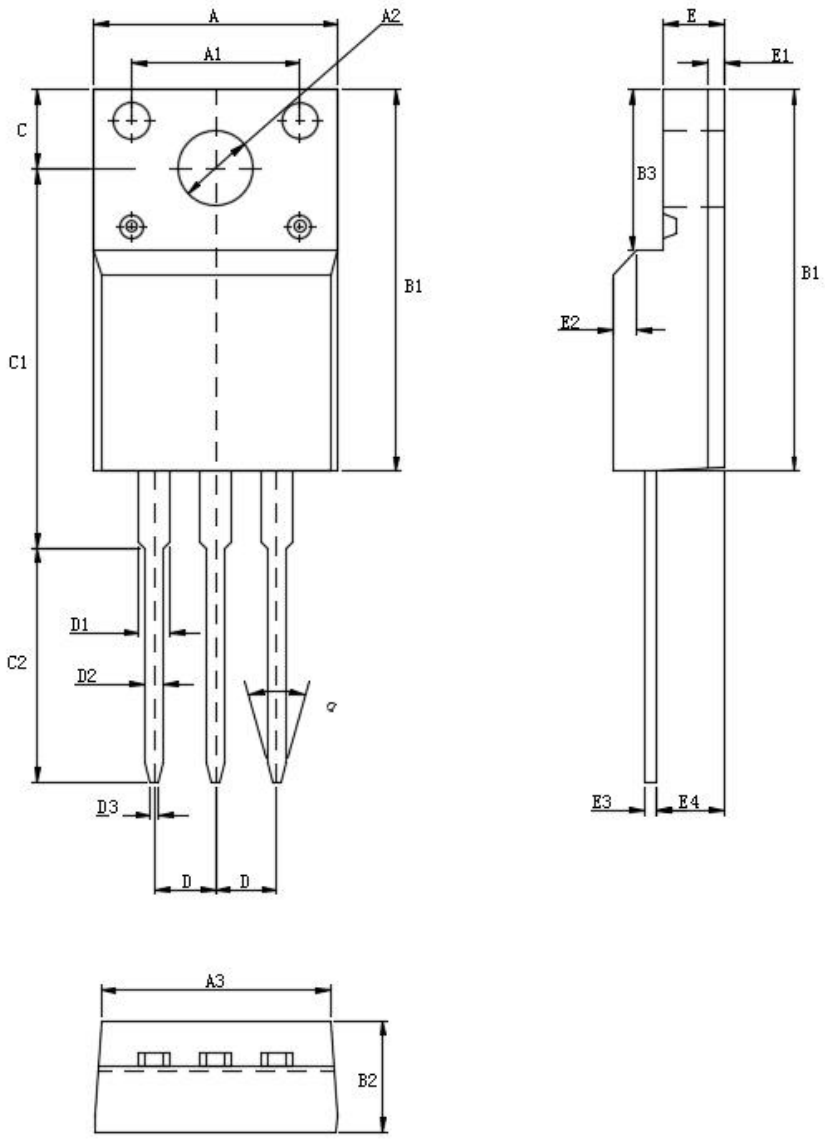
A
A2
A1
C
B1
C1
D1
C2
D2
D3
D
D
E
E1
B3
B1
E2
E3
E4
A3
B2